samet

smart slide Cekmece Sistemleri Drawer Systems

Full Extension
Manual

1

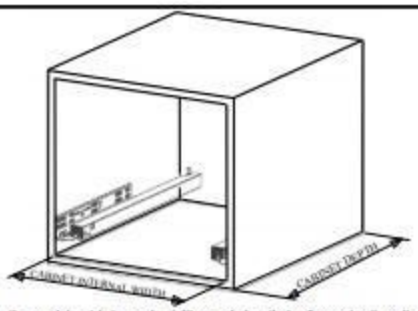

* Determine the cabinet internal width and depth before starting the design of drawer.

2

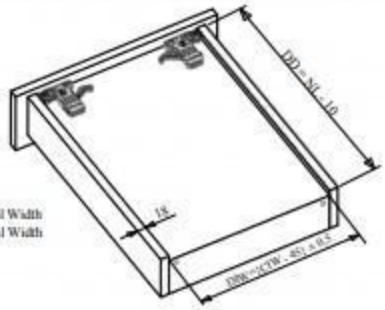

DIW = Drawer Internal Width
CIW = Cabinet Internal Width
DD = Drawer Depth
NL = Nominal Length

* Install the drawer according to the dimensions above.

3

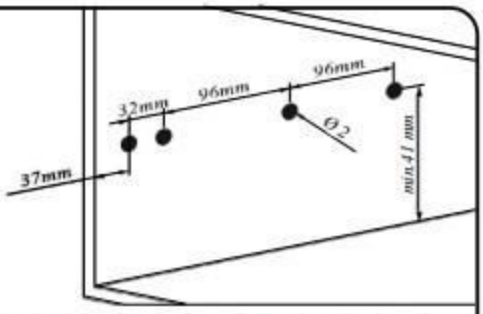

* Drill the slide mounting holes.(Use the Smart Drilling Jig with ruler or Smart Drilling Jig in order to work of drawer properly.)

4

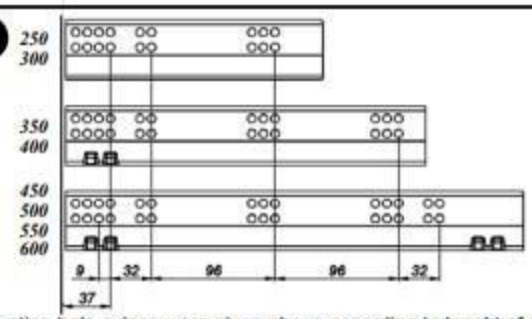

* Mounting hole axises were given above according to lenght of slide.

5

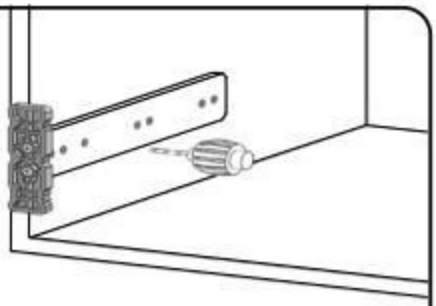

* Slider hole axises can be drilled by using Smart Drilling Jig.

6

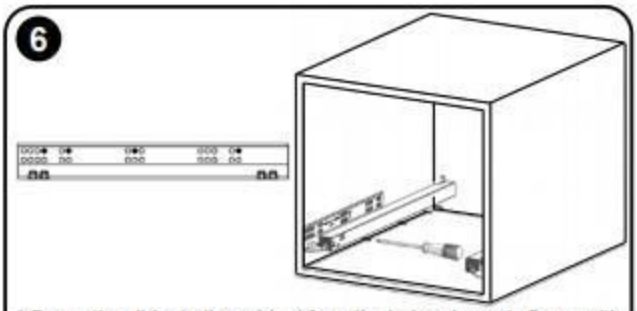

* Screw the slider to the cabinet from the holes shown in figure with chipboard screw Ø3.5x16.

7

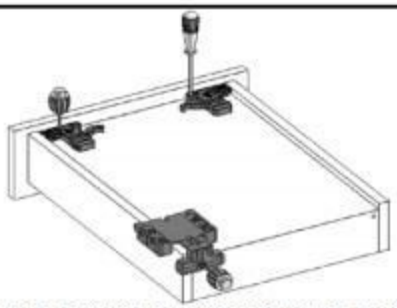

* Drill the Smart lock fixing holes and drawer back holes by using lock template.

8

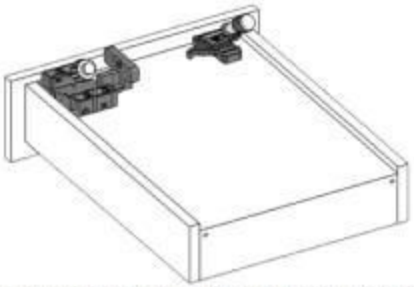

* Use angled holes to mount smart lock when wooden floor width is selected less then 12 mm.

9

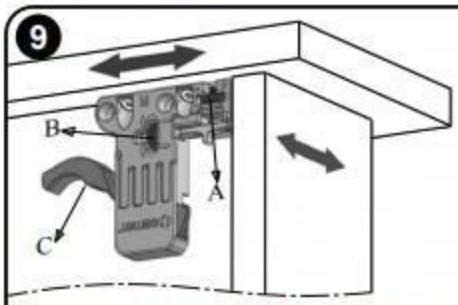

*Pull the "C" handle to displace drawer.Use "B" nut to adjust left-right and "A" nut to adjust up and down.

10

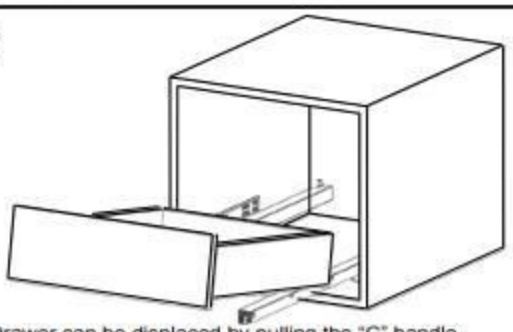

* Drawer can be displaced by pulling the "C" handle.